GENERAL NOTES

1. INSTALLATION OF PRECAST STRUCTURES SHALL BE PER MANUFACTURERS INSTRUCTIONS. CONTRACTOR SHALL SUBMIT SHOP DRAWINGS OF PRE-CAST STRUCTURES TO ENGINEER PRIOR TO ORDERING MATERIALS.
2. PRECAST STRUCTURE, RING, AND COVER SHALL BE DESIGNED FOR H-20 WHEEL LOADING.
3. CEMENT STABILIZED SAND SHALL CONTAIN A MINIMUM OF 1.5 SACKS OF CEMENT PER CUBIC YARD. SAND SHALL BE SP, SW OR SM PER USC (ASTM D2487) AND SHALL HAVE THE FOLLOWING PROPERTIES: LESS THAN 15% PASSING #200 SIEVE; LESS THAN 2% CLAY LUMPS; PI <7; LL <25.
4. TRACER STATION TO BE INCLUDED AT ALL MANHOLES AT THE INTERSECTIONS AND AT 500' MAXIMUM SPACING.

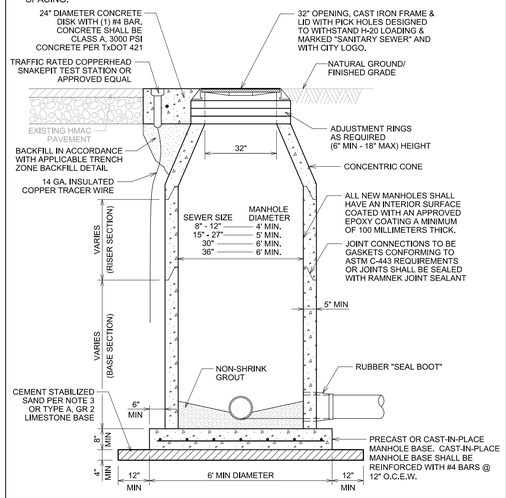

City of BRENHAM	SANITARY SEWER MANHOLE (PRE-CAST CONCRETE MANHOLE)	STANDARD CONSTRUCTION DETAILS
		DATE: 07/20/21 / REVISED DATE: 07/20/21
		SAN - 1

GENERAL NOTES

1. CLEANOUT BOOTS WILL ONLY BE ALLOWED ON A DEAD END OF A SANITARY SEWER LINE THAT IS LESS THAN 150 FEET LONG WITH SPECIFIC APPROVAL FROM THE CITY.

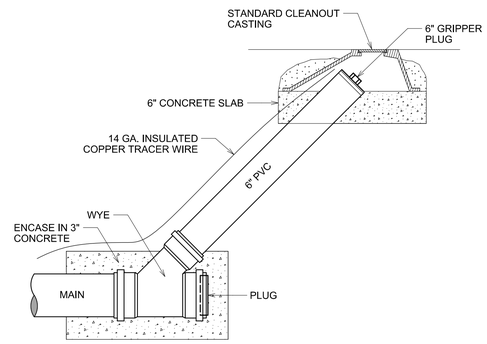

City of BRENHAM	SANITARY SEWER CLEANOUT	STANDARD CONSTRUCTION DETAILS
		DATE: 07/20/21 / REVISED DATE: 07/20/21
		SAN - 2

GENERAL NOTES

1. SANITARY SEWER SERVICE LATERAL AND FITTINGS SHALL BE PVC - SDR 35.
2. SEWER SERVICE LEADS SHALL NOT EXCEED 125' IN LENGTH.
3. SINGLE-FAMILY RESIDENTIAL SERVICES SHOULD BE INSTALLED AT A MANHOLE WHEN POSSIBLE
4. MULTI-FAMILY RESIDENTIAL, COMMERCIAL AND OFFICE DEVELOPMENT SERVICES SHALL BE MADE AT A MANHOLE.
5. "Y" ETCHED MARK ON CURB AT SERVICE LOCATION.

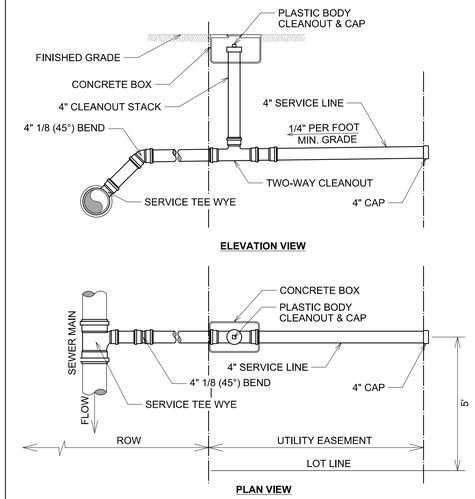

City of BRENHAM	SANITARY SEWER SERVICE DETAIL (SINGLE)	STANDARD CONSTRUCTION DETAILS
		DATE: 07/20/21 / REVISED DATE: 10/05/21
		SAN - 3

GENERAL NOTES

1. SANITARY SEWER SERVICE LATERAL AND FITTINGS SHALL BE PVC - SDR 35.
2. SEWER SERVICE LEADS SHALL NOT EXCEED 125' IN LENGTH.
3. SINGLE-FAMILY RESIDENTIAL SERVICES SHOULD BE INSTALLED AT A MANHOLE WHEN POSSIBLE.
4. MULTI-FAMILY RESIDENTIAL, COMMERCIAL AND OFFICE DEVELOPMENT SERVICES SHALL BE MADE AT A MANHOLE.
5. "Y" ETCHED MARK ON CURB AT SERVICE LOCATION.

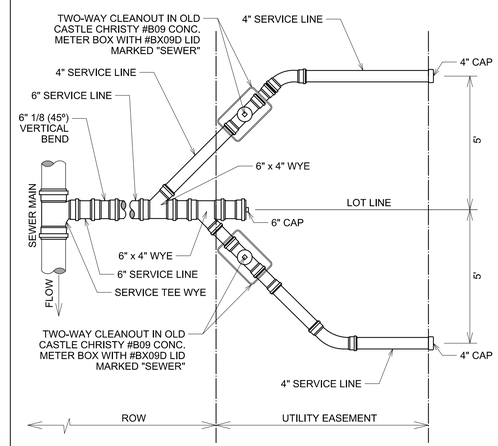

City of BRENHAM	SANITARY SEWER SERVICE DETAIL (DOUBLE)	STANDARD CONSTRUCTION DETAILS
		DATE: 07/20/21 / REVISED DATE: 10/05/21
		SAN - 4

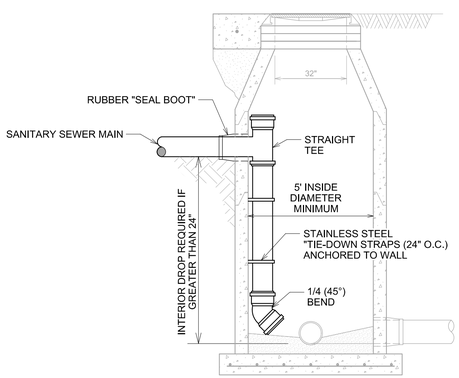

City of BRENHAM	DROP STRUCTURE FOR MANHOLE DETAIL	STANDARD CONSTRUCTION DETAILS
		DATE: 07/20/21 / REVISED DATE: 07/20/21
		SAN - 5